Trentino

Transitional Style Ceiling Fan

Project

Catalog

Type

Date

Product Description

The Trentino(MFT) Transitional-style ceiling fan is designed with efficiency and flexibility in mind. This fan boasts a silent AC motor with three adjustable speeds and a reversible feature for year-round comfort, effortlessly switching between downdraft mode for cooling in the summer and updraft mode for warmth during the winter. Its versatile mounting system accommodates standard and angled installations, while the blades are expertly crafted from durable plywood at a 10.5° pitch. The fan operates at a standard 120VAC input voltage and offers three light kit options, including an integrated LED light kit, an E26 socket, and A19 with 2 x 9W LED dimmable lamps at 3000K. For convenient control, the fan includes a standard pull chain, with the added option of remote and wall switch controls. Elevate your home with this ceiling fan, blending practicality and style seamlessly.

Fan Motor
- A variable 3-speed reversible motor
- AC Motor | 153 x 15mm motor | 3 Capacitor
- Motor Wattage: 57W
- 54 in Lead Wire | 6 in down rod included

Blades
- Blade is constructed from High-Quality plywood.
- 10.5°pitch

Electrical
- Input voltage 120VAC

Light Kit
- There are 3 options available
  1. Integrated LED light kit
  2. E26 socket only (lamp NOT included)
  3. A19 with 2 x 9W A19 LED Dimmable lamps at 3000K (lamp included)

Controls
- Standard pull chain control with optional remote and wall switch controls.

Optic Lens
- White Glass

Listings
- ETLus listed for dry location

Warranty
- Fan Motor: Lifetime Warranty
- Light Kit: 1 Year Limited Warranty
- Lamps: 1 Year Limited Warranty
- Warranty does not cover product failure due to an overvoltage event (power surge.) For installations where power surge may be possible, NICOR recommends installing additional surge protection at the electrical distribution panel

3-Blade Ceiling Fan

4-Blade Ceiling Fan

5-Blade Ceiling Fan

MFT

Transitional Style Ceiling Fan

3-Speed | Reversible

Intertek

Ordering

Ordering Information

Example: 50MFT1120LED3RCNKNK

Sweep	Series	Version	Voltage	Light Source	No. of Blades	Control	Housing Finish	Blade Finish
52	**MFT**	**1**	**120**	☐ **LED** (Integrated)	☐ **3**	☐ *_blank* (Pull Chains)	☐ **WH** (White)	☐ **WH** (White)
				☐ **E26** (Socket only)[1]	☐ **4**	☐ **RC** (Remote Control)	☐ **BK** (Black)	☐ **BK** (Black)
				☐ **A19** (Bulb included)	☐ **5**	☐ **WC** (Wall Control)	☐ **NK** (Brushed Nickel)	☐ **WT** (Walnut)
								☐ **NK** (Brushed Nickel)

Specifications and dimensions subject to change without notice. Please refer to the website for the most up-to-date information.

1. *E26 is socket-only, but the bulb is not included.*
2. *Contact factory for MOQ and lead time.*

Finishes

52MFT**BKBK

52MFT**WHWH

52MFT**NKNK

Dimensions

Dimensions

	Height (H^1)	Width (W)	Height (H^2)
With Light Source	**16.71"** (425 mm)	**10.23"** (260 mm)	**11.45"** (291mm)

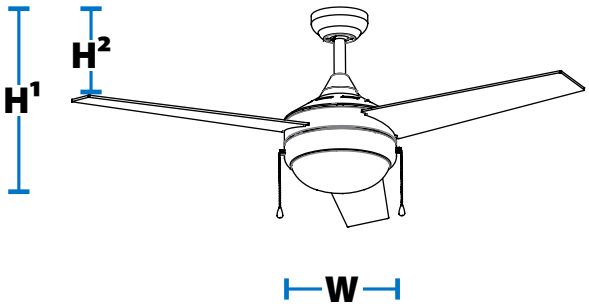

Performance Data

Fan Motor Performance Data

	RPM	Airflow High Speed	Fan Wattage	Airflow Efficiency
3-BLADE	High: 185	4046 CFM	57W	81
	Low: 93			
4-BLADE	High: 195	4196 CFM	57W	83
	Low: 95			
5-BLADE	High: 181	3972 CFM	57W	79
	Low: 84			

Light Kit Performance Data

Light Source	Lumens	Watts	Lumens/ Watt	CCT	CRI	Dimmable
LED	1800	22W	81.81	3000K	90	Yes
A19	1500	2 x 9W	83.33	3000K	90	Yes

Please note that the E26 option will be socket-only and to be provided by others.